HONDA

Rotary Mower

HRZ536CTDE

OWNER'S MANUAL
MANUEL DE L'UTILISATEUR
BEDIENUNGSANLEITUNG
MANUAL DE EXPLICACIONES
GEBRIUKSAANWIJZING
MANUALE DELL'UTENT

© 2004-2007 American Honda Motor Co., Inc.—All Rights Reserved

CONTENTS

SAFETY INSTRUCTIONS 3
SAFETY LABEL 6
CONTROLS & FEATURES 7
COMPONENT & CONTROL LOCATIONS 7
DESCRIPTION OF CONTROLS 8
BEFORE OPERATION 11
ARE YOU READY TO GET STARTED? 11
IS YOUR LAWN MOWER READY TO GO? 11
CHECK YOUR WORK AREA 12
OPERATION 15
MOWING PRECAUTIONS 15
STARTING THE ENGINE 15
OPERATING THE CONTROLS FOR MOWING 17
STOPPING THE ENGINE 20
SAFE MOWING PRACTICES 21
MOWING TIPS 23
SERVICING YOUR MOWER 26
THE IMPORTANCE OF PROPER MAINTENANCE 26
MAINTENANCE SAFETY 27
MAINTENANCE SCHEDULE 28
BLADE 29
GRASS BAG CLEANING AND REPLACEMENT 31
ENGINE MAINTENANCE 32
FLYWHEEL BRAKE 36
CASTER WHEEL LOCK PINS 37
FUEL SYSTEM 38
STORAGE 40
STORAGE PREPARATION 40
STORAGE PRECAUTIONS 43
REMOVAL FROM STORAGE 43
TRANSPORTING 44
BEFORE LOADING 44
LOADING AND UNLOADING 44
TAKING CARE OF UNEXPECTED PROBLEMS 45
ENGINE PROBLEMS 45
VIBRATION PROBLEMS 46
MOWING AND BAGGING PROBLEMS 46
SET-UP 47
BEFORE OPERATION 48
TECHNICAL & CONSUMER INFORMATION 49
TECHNICAL INFORMATION 49
CONSUMER INFORMATION 54

INTRODUCTION

E

Thank you for purchasing a Honda lawn mower.

This manual covers the operation and maintenance of the Honda HRZ536C lawn mower.

We want to help you get the best results from your new mower and to operate it safely. This manual contains the information on how to do that; please read it carefully.

This manual should be considered a permanent part of the lawn mower and should remain with it if it is resold.

If you have a problem or questions concerning the mower, contact your supplying dealer.

We recommend that you read the warranty policy to fully understand your rights and responsibilities. The warranty policy is a separate document provided by your dealer.

Honda Power Equipment Mfg., Inc. reserves the right to make changes at any time without notice and without incurring any obligation.

No part of this publication may be reproduced without written permission.

SAFETY MESSAGES

Pay special attention to statements preceded by the following words:

⚠ WARNING — You CAN be KILLED or SERIOUSLY HURT if you don't follow instructions.

⚠ CAUTION — You CAN be HURT if you don't follow instructions.

Each message tells you what the hazard is, what can happen, and what you can do to avoid or reduce injury.

DAMAGE PREVENTION MESSAGES

You will also see other important messages that are preceded by the following word::

NOTICE — Your lawn mower or other property can be damaged if you don't follow instructions.

The purpose of these messages is to help prevent damage to your lawn mower, other property, or the environment.

SAFETY INSTRUCTIONS

⚠ WARNING

To insure safe operation -

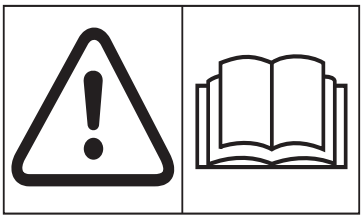

- **Honda lawn mowers are designed to give safe and dependable service if operated according to instructions. Read and understand the Owner's Manual before operating the mower. Failure to do so could result in personal injury or equipment damage.**

- **Read instructions carefully, become familiar with controls and proper use of equipment.**
- **Never allow children or people unfamiliar with these instructions to use the lawn mower. Local regulations may restrict the age of the operator.**
- **Never mow while people, especially children, or pets are nearby.**
- **Keep in mind that the operator or user is responsible for accidents or hazards occurring to other people or their property.**
- **While mowing, always wear substantial footwear and long trousers.**
- **Do not operate the equipment when barefoot or wearing open sandals.**
- **Thoroughly inspect the area where the equipment is to be used and remove all objects which may be thrown by the machine.**
- **Gasoline is highly flammable:**
  - **Store fuel in containers specifically designed for this purpose.**
  - **Refuel outdoors only and do not smoke while refuelling.**
  - **Add fuel before starting the engine. Never remove the cap of the fuel tank or add gasoline while the engine is running or when the engine is hot.**
  - **If gasoline is spilled, do not attempt to start the engine but move the machine away from the area of spillage and avoid creating any source of ignition until the gasoline vapors have dissipated.**
  - **Install fuel caps securely.**

- **Replace faulty mufflers.**
- **Before using, always visually inspect to see that the blade(s), blade**
- **bolt(s) and mower housing are not worn or damaged. Replace worn**
- **or damaged blade(s) and bolt(s) in sets to preserve balance.On multi-bladed machines, take care as rotating one blade can cause**
- **other blades to rotate.**
- **Do not operate the engine in a confined space where dangerous**
- **carbon monoxide fumes can collect.**
- **Mow only in daylight or good artificial light.**
- **Avoid operating the equipment in wet grass, where feasible.**
- **Mowing on slopes:**
  - **Always be sure of your footing on slopes.**
  - **Mow across slopes, never up and down.**
  - **Walk, never run.**
  - **Exercise extreme caution when changing direction on slopes.**
  - **Do not mow excessively steep slopes.**
- **Use extreme caution when reversing or pulling the lawn mower toward you.**
- **Stop the blade(s) if the lawn mower has to be tilted for transporting, when crossing surfaces other than grass and when transporting the lawn mower to and from the area to be mowed.**
- **Never operate the lawn mower with defective guards or shields, or without safety devices (for example, deflectors and/or grass catchers in place).**
- **Do not attempt to make wheel height adjustments while the machine is running.**
- **Do not change the engine governor setting or over-speed the engine.**
- **Disengage all blade and drive clutches before starting the machine.**
- **Start the engine carefully according to the instructions and with feet well away from the blade(s).**
- **Do not tilt the lawn mower when starting the engine.**

- **Do not start the engine when standing in front of the discharge chute opening.**
- **Do not put hands or feet near or under rotating parts. Keep clear of the discharge opening at all times.**
- **Never pick up or carry a lawn mower while the engine is running.**
- **Stop the engine and disconnect the spark plug wire:**
  - **Before clearing a blockage or unclogging the lawn mower.**
  - **Before checking, cleaning or working on the lawn mower.**
  - **After striking a foreign object. Inspect the lawn mower for damage and make repairs before restarting and operating the lawn mower.**
  - **If lawn mower starts to vibrate abnormally, check immediately.**
- **Stop the engine:**
  - **Whenever you leave the lawn mower.**
  - **Before refuelling the lawn mower.**
  - **Before removing the grass catcher, side discharge adapter or mulching plug.**
- **Reduce the throttle setting during engine shut down and turn the fuel valve off at the conclusion of mowing.**
- **Keep all nuts, bolts and screws tight to be sure the equipment is in safe working condition.**
- **Never store the equipment with gasoline in the tank inside a building where fumes may reach an open flame or spark.**
- **Allow the engine to cool before storing in any enclosure.**
- **To reduce the fire hazard, keep the engine, muffler, battery compartment (if applicable) and gasoline storage area free of grass, leaves or excessive grease.**
- **Check the grass catcher frequently for wear or deterioration.**
- **Replace worn or damaged parts for safety.**
- **If the fuel tank has to be drained, this should be done outdoors.**
- **Wear eye protection.**

SAFETY LABEL

This label warns you of potential hazards that can cause serious injury. Carefully read the meaning of each label. If a label comes off or becomes hard to read, contact your dealer for replacement.

Symbol	Meaning
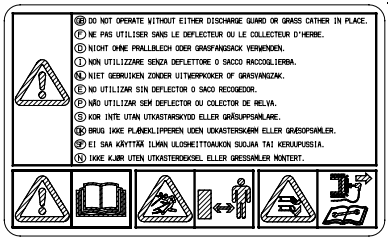	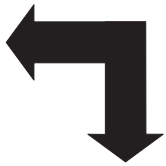
	Read and understand the owner's manual and the operation of all controls before using the machine.
	Avoid mowing when people, mainly children, or pets are in the operating area.
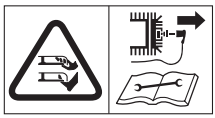	Keep hands and feet away from the mower deck. Pull off the spark plug cap before carrying out maintenance work.

IDENTIFICATION PLATE

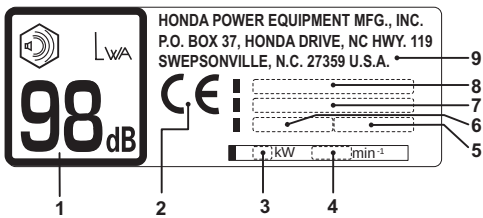

1. Permissible sound power level according to Directive 2000/14/EC.
2. Conformity mark, according to the EEC/89/392 modified Directive.
3. Nominal power in kilowatt.
4. Recommended engine speed in rpm.
5. Weight.
6. Year of manufacture.
7. Serial number.
8. Model.
9. Manufacturer's name and address.

CONTROLS & FEATURES

COMPONENT & CONTROL LOCATIONS

Use this illustration to locate and identify the most frequently used controls.

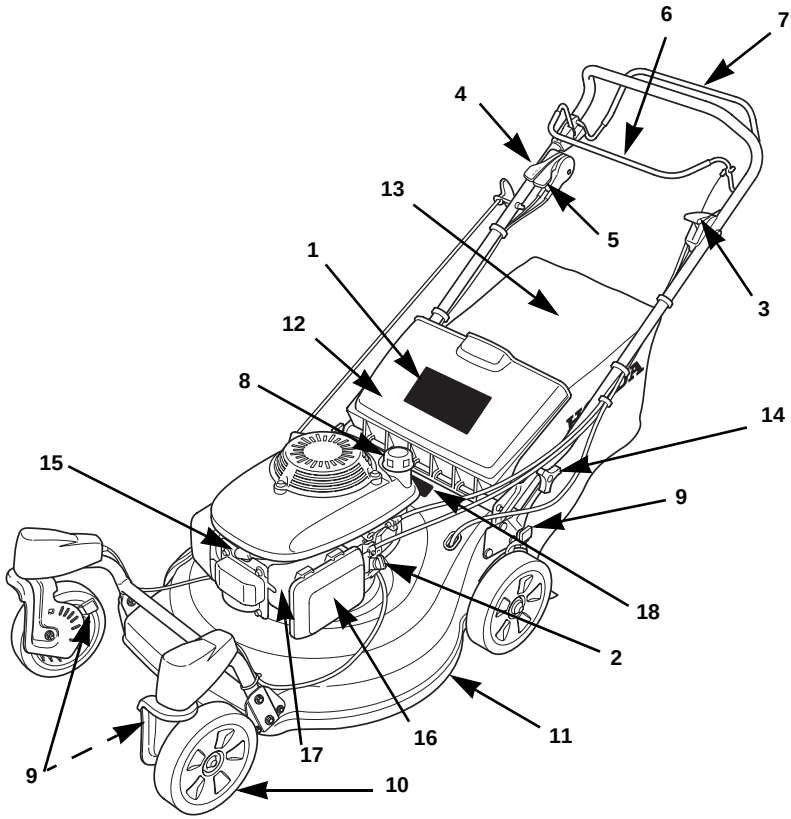

1 Safety label
2 Fuel valve
3 Throttle lever
4 Shift lever
5 Caster wheel lock lever
6 Blade control lever
7 Drive clutch
8 Fuel tank cap
9 Cutting height adjustment levers (4)
10 Caster wheel
11 Mower deck
12 Rear discharge guard
13 Grass bag
14 Handlebar locking knob
15 Spark plug cap
16 Air cleaner
17 Carburetor
18 Identification plate

DESCRIPTION OF CONTROLS

Fuel Valve

The fuel valve [1] controls fuel flow from the fuel tank to the carburetor. The fuel valve must be ON [2] to start and operate the mower. The fuel valve should be kept OFF [3] when the mower is not in use.

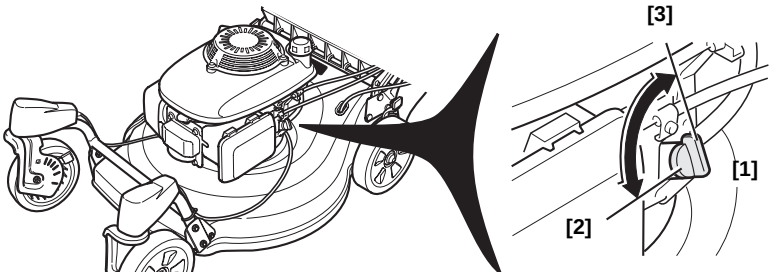

Throttle Lever

	CHOKE	For starting a cold engine.
	FAST	For restarting a warm engine and for mowing.
	SLOW	For idling the engine.

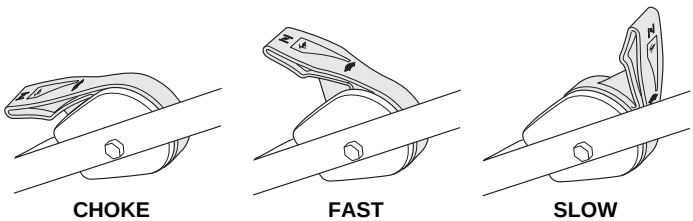

Flywheel Brake Lever

The flywheel brake lever [1] is connected to the engine flywheel brake and the engine switch. The engine will not start or run unless this lever is held against the handlebar.

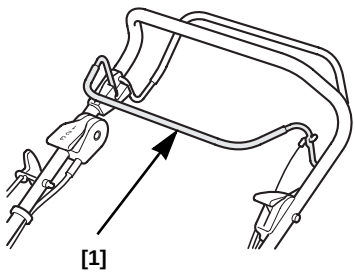

Drive Clutch Lever

The drive clutch lever [2] engages and disengages the transmission that drives the rear wheels. The drive clutch lever should only be engaged after the engine has been warmed up.

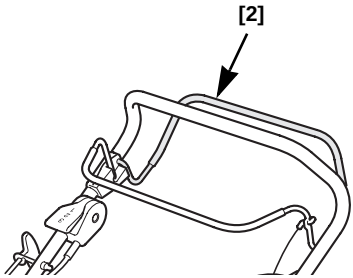

Shift Lever

The shift lever [3] selects the mower ground speed.

1 (slow)	For mowing thick grass or maneuvering in small areas.
2 (medium)	For intermediate self-propelled speed.
3 (fast)	For maximum self-propelled speed in large, open areas and for transport.

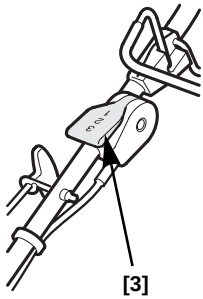

Caster Wheel Lock Lever

The caster wheel lock lever [4] is used to RELEASE [5] and LOCK [6] the front caster wheels. The lock lever can be used anytime while moving forward but should not be used when moving backward.

LOCK Front wheels are locked in straight ahead direction.

RELEASE Front wheels are released to swivel freely.

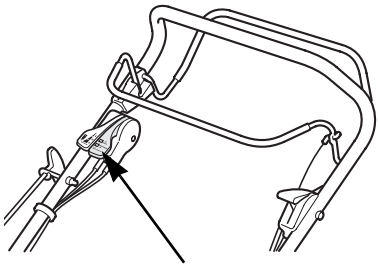

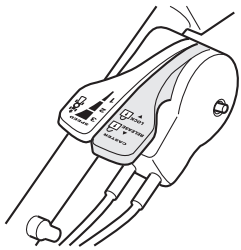

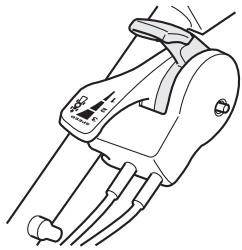

Cutting Height Adjustment Levers

The mower deck can be set to any of the six approximate settings using the cutting height adjustment levers [7]. Each wheel should be adjusted to the same position.

Lower deck	Move front adjusters forward & rear adjusters backward.
Raise deck	Move front adjusters backward & rear adjusters forward.

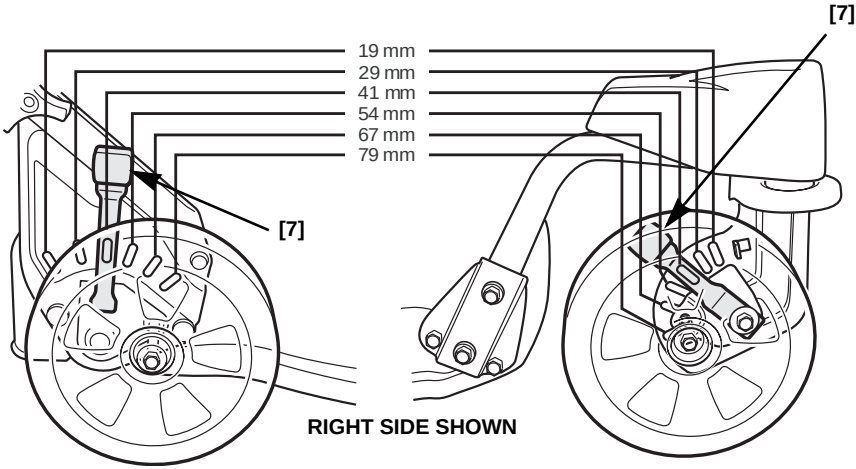

BEFORE OPERATION

ARE YOU READY TO GET STARTED?

Your safety is your responsibility. A little time spent in preparation will significantly reduce your risk of injury.

Knowledge

Read and understand this manual. Know what the controls do and how to operate them.

Familiarize yourself with the lawn mower and its operation before you begin using it. Know how to quickly shut off the lawn mower in case of an emergency.

IS YOUR LAWN MOWER READY TO GO?

For your safety, and to maximize the service life of your lawn mower, it is very important to take a few moments before you operate the lawn mower to check its condition. Be sure to take care of any problem you find, or have your servicing dealer correct it, before you operate the lawn mower.

⚠ WARNING

Improperly maintaining this lawn mower, or failing to correct a problem before operation, could cause a malfunction in which you could be seriously injured.

Always perform a pre-operation inspection before each operation, and correct any problem.

Before beginning your pre-operation checks, be sure the lawn mower is on a level surface.

Check the General Condition of the Lawn Mower:

- Look around and underneath the lawn mower for signs of oil or gasoline leaks.
- Look for signs of damage.
- Check each control for proper operation.
- Check the blade for wear. Replace as necessary (page 29). Check that the blade bolts are tight (page 30).
- Check that all nuts, bolts, screws are tightened.

Check the Engine

- Check the air cleaner (page 34) and oil level (page 32).
- Check the fuel level (page 38). Starting with a full tank will help to eliminate or reduce operating interruptions for refueling.

CHECK YOUR WORK AREA

For your safety and the safety of others, always inspect the area before operating the lawn mower.

Objects

Anything which can be picked up by the blade and thrown is a potential hazard to you and others. Look for things like stones, sticks, nails, and wire, and remove them from the work area.

People and Pets

People and animals near the work area can move into your lawn mower’s path or into a position where they could be struck by thrown objects. Clear the area of people, especially children and pets. Their safety is your responsibility.

Work Area

Check the condition of the grass. Adjust your lawn mower ground speed and mowing swath accordingly.

Cutting Height

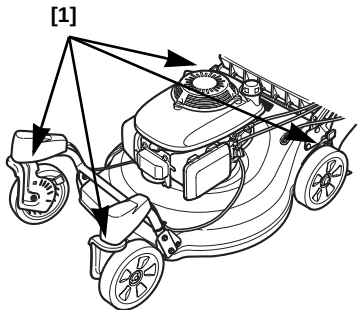

Set all four adjustment levers [1] to the same cutting height position. Each position changes the height approximately 13 mm.

To adjust cutting height, pull each adjustment lever toward the wheel, and move it into another notch.

If you are not sure what cutting height to select, start with a high setting and check the appearance of the lawn after mowing a small area. Readjust cutting height if necessary.

Grass Bag

A lawn mower works like a vacuum cleaner; it blows air through the bag, which traps the grass clippings. Always empty the grass bag before it becomes filled to the limit of its capacity. Bagging performance will diminish after the bag becomes about 90% full. Also, the bag is easier to empty when not packed full.

Inspection

Inspect the grass bag before use. Check for holes, tears, and excessive wear. The grass bag does wear during normal use, and will eventually require replacement (page 31).

Installation

1. Raise the rear discharge guard [1], grasp the grass bag handle [2] and hook the grass bag frame onto the mower deck as shown.
2. Release the rear discharge guard to secure the grass bag in place.

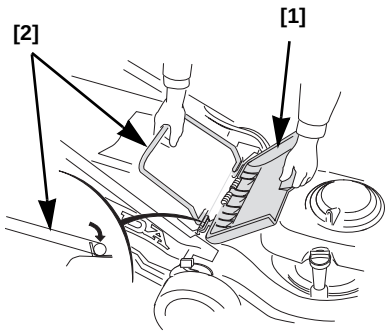

Removal

1. Raise the rear discharge guard, grasp the grass bag handle and remove the grass bag.
2. Release the rear discharge guard.
3. When the grass bag is clear of the rear discharge, you can lift the grass bag through the handlebars, or remove it from the rear of the mower below the handlebar.

OPERATION

MOWING PRECAUTIONS

Before operating the mower for the first time, please review the *LAWN MOWER SAFETY* chapter beginning on page 3 and the *BEFORE OPERATION* chapter beginning on page 11.

Even if you have operated other mowers, take time to become familiar with how this mower works and practice in a safe area until you build up your skills.

For your safety, avoid starting or operating the engine in an enclosed area, such as a garage. Your mower's exhaust contains poisonous carbon monoxide gas which can collect rapidly in an enclosed area and cause illness or death.

STARTING THE ENGINE

The blade turns when you pull the starter grip. It is easiest to start the engine in a clear or mowed area where the blade can turn freely.

1. Turn the fuel valve [1] to the ON [2] position.

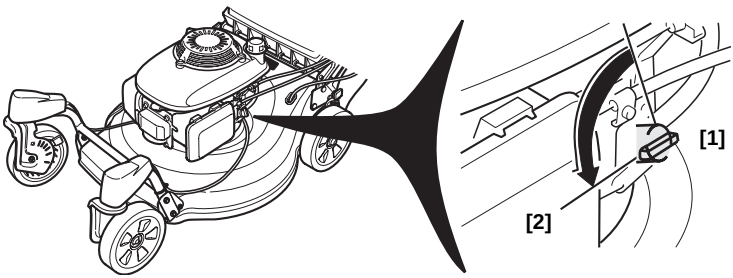

2. Move the throttle lever [3] to the CHOKE [4] position for a cold engine, or FAST [5] for a warm engine.

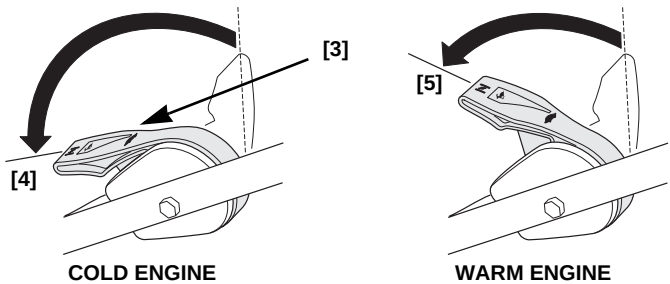

3. Release the drive clutch lever [6] (page 9). If the drive clutch lever is engaged, the mower will move forward when you operate the starter.

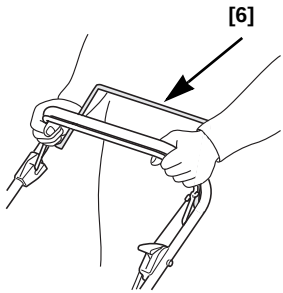

4. Pull back on the flywheel brake lever [7] and hold it against the handlebar.

5. Pull the starter grip [8] lightly until you feel resistance, then pull briskly. Return the starter grip gently.

   Keep your hands and feet away from the mower deck at all times when starting and running the engine.

   Continue to hold the flywheel brake lever against the handlebar; the engine will stop if you release the lever.

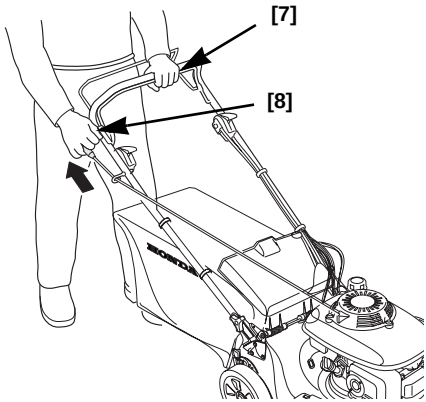

6. If the CHOKE [4] position was used during starting, move the throttle lever away from the CHOKE position as soon as the engine warms up enough to run smoothly. Set the throttle lever at FAST [5] to mow or at SLOW to idle.

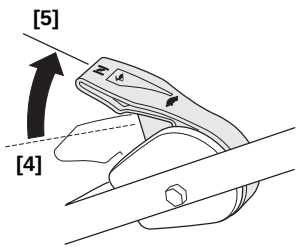

OPERATING THE CONTROLS FOR MOWING

Throttle Lever

For best cut quality, always mow with the throttle lever [1] in the FAST [2] position. When the blade rotates at the preset fast speed, it creates a strong fan action that lifts and cuts grass more efficiently. Do not try to increase the preset engine speed, the blade could fracture and come apart.

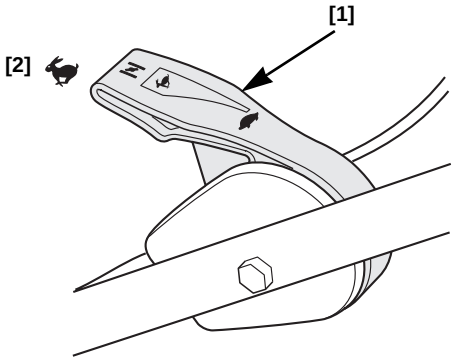

When you need to leave the mower for any reason, move the throttle to SLOW, then turn the engine OFF by releasing the flywheel brake lever.

Flywheel Brake Lever

The flywheel brake lever [3] must be pulled back against the handlebar to start and run the engine. The blade starts to rotate when the lever is pulled back against the handlebar and the recoil starter grip is pulled.

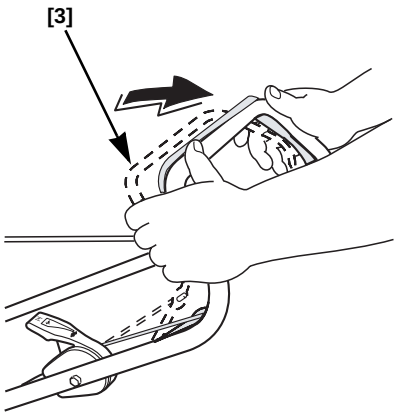

Continue to hold the lever against the handlebar to keep the engine running and the blade rotating.

Release the lever to stop the engine and stop blade rotation.

Drive Clutch Lever

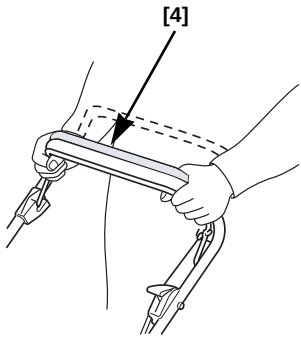

Push the drive clutch lever [4] forward and hold it against the handlebar to propel the mower forward.

Release the drive clutch lever to stop the mower's forward movement.

Always release the drive clutch lever before starting the engine. If the drive clutch is engaged, the mower will move forward when you operate the starter.

Operate the drive clutch lever with a quick and complete motion, so the drive clutch is either fully engaged or fully released. Hold the drive clutch lever against the handlebar during self-propelled mowing. This will help to extend the service life of the clutch mechanism.

Shift Lever

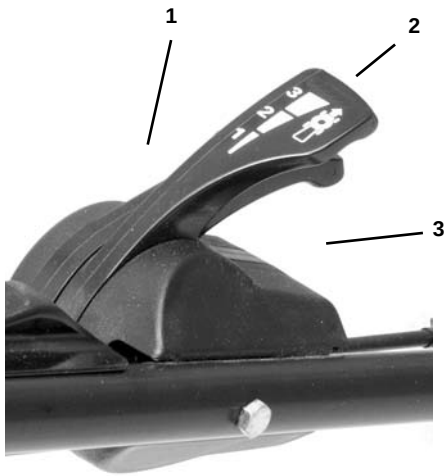

Use the shift lever to adjust the forward speed of the mower. Do not use the throttle lever; the throttle lever must be kept in the FAST position for the best mowing performance.

You may move the shift lever anytime; however, if the mower is pulling hard, release the drive clutch lever between shifts for smooth operation.

Gears 1 and 2 are recommended for maximum mowing performance. Gear 3 should be used to transport the mower.

Caster Wheel Lock Lever

Use the caster wheel lock lever [1] to hold the front wheels in the straight ahead direction. The lock lever can be moved anytime while moving forward; however, if the lever is difficult to move to the RELEASE position [2], do not force it. Push down on the handlebar enough to raise the front wheels off the ground to release pressure on the locking pins. Then move the lever to the RELEASE position.

The LOCK position [3] must be used when mowing across slopes or when straight cutting paths are desired. The RELEASE position is recommended for maximum maneuverability on level terrain.

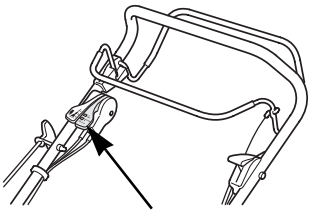

[1]

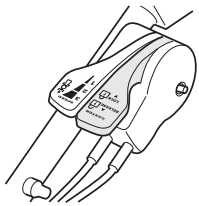

[2]

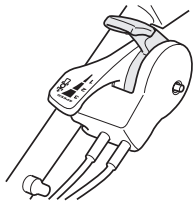

[3]

With the lever in the RELEASE position [2], push the mower forward then move the lock lever to the LOCK position [3]. This will lock the wheels in the trailing position [4] and prevent the wheels from getting locked in the leading position [5].

If the wheels are locked in the leading position, cut quality may suffer and additional stress may be transferred to the mower causing mower damage.

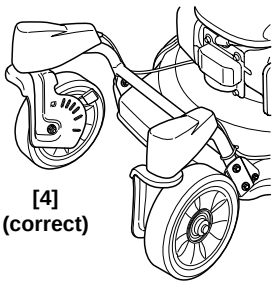

[4]
(correct)

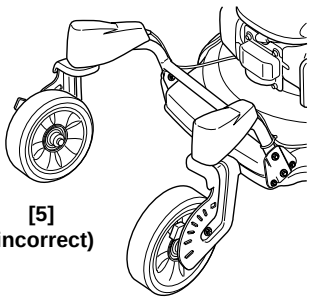

[5]
(incorrect)

NOTICE

If the mower is operated with the front wheels locked in the leading position, mower damage may result.

STOPPING THE ENGINE

1. Move the throttle lever to the SLOW [1] position.

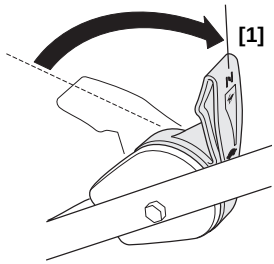

2. Release the drive clutch lever [2] .

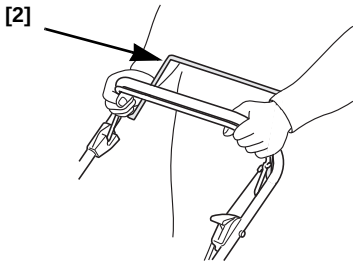

3. Release the flywheel brake lever [3].

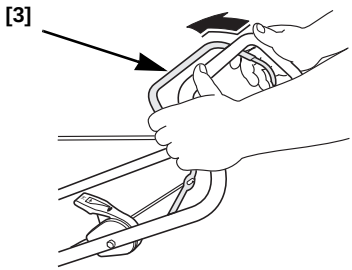

4. When the mower is not in use, turn the fuel valve [4] to OFF [5].

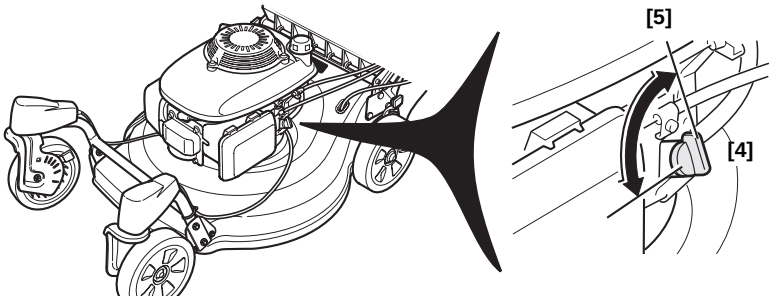

SAFE MOWING PRACTICES

For your safety, keep all four wheels on the ground, and be careful to avoid losing your footing and control of the mower. Keep a firm grip on the handlebar and walk, never run, with the mower. Be very careful when mowing uneven or rough ground. If stuck, do not kick or push the mower with your foot. Use the handlebar only.

⚠ WARNING

The blade is sharp and spins at high speed.

A spinning blade can cut you severely and can amputate fingers and toes.

- Wear protective footwear
- Keep your hands and feet away from the mower deck while the engine is running.
- Stop the engine before performing any adjustment, inspection, or maintenance.

Slopes

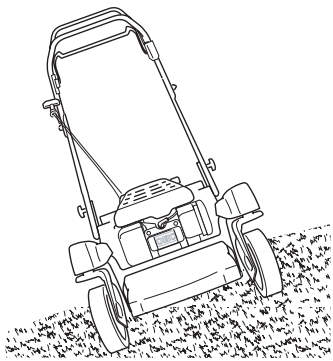

Mow across slopes, not up and down. Avoid steep slopes (more than 20°), and be careful when changing direction. Mowing on a slope when the grass is damp or wet could cause you to slip, fall, and lose control of the mower.

IMPORTANT SAFETY PRECAUTION

Always have the front wheels in the LOCK position and completely locked when on a slope (page 9). This will improve mower control and, if the mower is left unattended on the slope, it will prevent the mower from turning and going down the slope and possibly injurying someone.

Obstacles

Use the side of the mower to cut close to obstacles, such as fences or walls. Release the drive clutch lever to disengage the drive when mowing around trees and other obstacles. Push the mower around obstacles for better directional control. Be careful when mowing over obstacles embedded in the lawn, such as sprinkler heads, paving, edging, etc. Avoid anything sticking up above the surface of the lawn.

If the blade hits something, or if the mower starts to vibrate, stop the engine immediately, disconnect the spark plug cap, and check for damage (page 29). Striking objects may damage the blade, bend the crankshaft, and/or break the mower deck or other components. Vibration usually indicates serious trouble.

⚠ WARNING

A worn, cracked, or damaged blade can break, and pieces of the damaged blade can become dangerous projectiles.

Thrown objects can cause serious injury.

Inspect the blade(s) regularly, and do not operate the mower with a worn or damaged blade.

The *Distributor's Limited Warranty* does not cover parts damaged by accident or collision.

Gravel and Loose Objects

Gravel, loose stones, and landscaping material can be picked up by the mower and thrown many feet with enough force to cause serious personal injury and/or property damage. The best way to prevent potential injury from thrown objects is to release the flywheel brake lever to stop the blade before reaching areas with gravel, loose stones, or landscaping material.

MOWING TIPS

When to Mow

Most grasses should be mowed when they have grown ½ to 1 inch above their recommended height. More frequent mowing is required for mulching than for bagging. For best mulching results, you may need to mow the lawn twice a week during the growing season.

Cutting Height

Consult a local nursery or lawn and garden center for cutting height recommendations and advice about specific types of grasses and growing conditions in your area.

Most grass has stems and leaves. If you cut off the leaves, you'll scalp the lawn. Let the grass recover between mowings. Your mower will work better, and your lawn will look better.

If your grass gets too tall, cut it once at the highest cutting height setting, then mow again in 2 or 3 days. Don't take off more than one third of total grass height in any one mowing, or brown patches may develop. Cutting height adjustment is explained on page 10.

Cutting Width

For an even lawn finish, overlap each mowing swath by a few inches. If the grass is very tall or thick, use more overlap and a narrower mowing swath.

Blade Speed

The blade must spin very fast to cut properly. Always use the FAST throttle setting. If engine speed drops, it could mean the engine is being overloaded by the blade trying to cut too much grass. Mow a narrower swath, move the mower slower, install the discharge chute, or raise the cutting height.

Blade Sharpness

A sharp blade cuts cleanly. A dull blade tears the grass, leaving shredded ends that turn brown. When your blade doesn't cut cleanly anymore, have it sharpened or replaced.

Dry Grass

If the ground is too dry, mowing will stir up a lot of dust. Besides being unpleasant to work in, too much dust will clog the air filter. If dust is a problem, water your lawn the day before mowing. Mow when the grass is dry to your touch, but the soil is still moist.

Wet Grass

Wet grass is slippery and can make you lose your footing. Also, wet grass clippings will clog the mower deck and collect in clumps on the lawn. Always wait for wet grass to dry before mowing.

Fallen Leaves

When equipped with the grass bag, your mower can be used to pick up fallen leaves for disposal. If using the mower to bag large amounts of fallen leaves, and not for mowing, set the cutting height adjustment levers so the front of the mower deck is one or two settings higher than the rear.

If you want to mulch fallen leaves into your lawn, don’t let the leaf cover get too deep before you begin. For best results, start mulching while grass still shows through the leaf cover. In places where fallen leaves completely cover the grass, remove the leaves by raking, or install a grass bag, so your mower can pick them up for disposal.

Clogged Mower Deck

Before clearing a clogged mower deck, stop the engine and turn the fuel valve to the OFF position. With the spark plug cap disconnected, tilt the mower so the carburetor side is up.

Clear a clogged deck with a stick, not your hands.

Mowing Patterns

Your Honda mower will work most efficiently if you use the following mowing patterns as much as possible. Mower deck and equipment design, and the direction in which the blade rotates, cause these mowing patterns to give the best results.

Mulching (with optional mulching plug)

Use a counterclockwise mowing pattern. If the lawn has an irregular shape, or many obstacles, divide it into sections where you can use counterclockwise patterns.

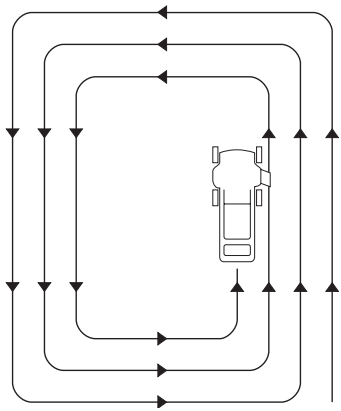

MULCHING PATTERN

Bagging

Use a clockwise mowing pattern. This will give the best bagging performance, leaving the least amount of clippings on the lawn. For thick, heavy grass, an optional high-lift bagging blade may be purchased from an authorized servicing Honda dealer.

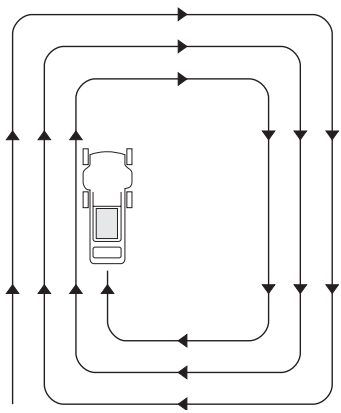

BAGGING AND REAR DISCHARGE PATTERN

SERVICING YOUR MOWER

THE IMPORTANCE OF PROPER MAINTENANCE

Proper maintenance is essential for safe, economical, and trouble-free operation. It will also help reduce air pollution.

⚠ WARNING

Improper maintenance, or failure to correct a problem before operation, can cause a malfunction in which you can be seriously hurt or killed.

Always follow the inspection and maintenance recommendations and schedules in this owner's manual.

To help you properly care for your mower, the following pages include a maintenance schedule, routine inspection procedures, and simple maintenance procedures using basic hand tools. Other service tasks that are more difficult, or require special tools, are best handled by professionals and are normally performed by a Honda technician or other qualified mechanic.

The maintenance schedule applies to normal operating conditions. If you operate your mower under severe conditions, such as sustained high-load or high-temperature operation, or use in unusually wet or dusty conditions, consult your servicing dealer for recommendations applicable to your individual needs and use.

MAINTENANCE SAFETY

Some of the most important safety precautions follow. However, we cannot warn you of every conceivable hazard that can arise in performing maintenance. Only you can decide whether or not you should perform a given task.

⚠ WARNING

Failure to properly follow maintenance instructions and precautions can cause you to be seriously hurt or killed.

Always follow the procedures and precautions in the owner's manual.

Safety Precautions

- Make sure the engine is off before you begin any maintenance or repairs. This will eliminate several potential hazards:
  - **Carbon monoxide poisoning from engine exhaust.**

    Be sure there is adequate ventilation whenever you operate the engine.
  - **Burns from hot parts.**

    Let the engine and exhaust system cool before touching.
  - **Injury from moving parts.**

    Do not run the engine unless instructed to do so.
- Read the instructions before you begin, and make sure you have the tools and skills required.
- To reduce the possibility of fire or explosion, be careful when working around gasoline. Use only a nonflammable solvent, not gasoline, to clean parts. Keep cigarettes, sparks, and flames away from all fuel-related parts.

Remember that an authorized Honda servicing dealer knows your mower best and is fully equipped to maintain and repair it.

To ensure the best quality and reliability, use only new, genuine Honda parts or their equivalents for repair and replacement.

MAINTENANCE SCHEDULE

ITEM	REGULAR SERVICE PERIOD Perform at every indicated interval	Before each use	First month or 5 hours	Every year or 25 hours	Every 50 hours	Every 100 hours	Every 150 hours	See page
Blade	Check condition	O						29
	Check bolt torque	O						30
Grass bag	Check	O						31
Engine oil	Check	O						32
	Change		O		O (1)			33
Air cleaner	Check	O						34
	Clean			O (1)				
	Replace						O (1)	
Spark plug	Check-Adjust					O		35
	Replace						O	
Spark arrester	Clean-Inspect					O		36
Valve clearance	Adjust						O (2)	–
Idle speed	Check-Adjust						O (2)	–
Throttle cable	Adjust					O (2)		–
Flywheel brake	Check operation					O		36
	Check pad					O (2)		–
Caster wheel lock pins	Clean					O		37
	Check-Lubricate					O		
Pinion gears	Lubricate					O (1,2)		–
Combustion chamber	Clean	After every 250 hours (2)						–
Fuel system	Clean tank						O (2)	–
	Check line	Every 2 years [replace if necessary (2)]						–

(1) Service more frequently when used in dusty areas.

(2) These items should only be serviced by an authorized Honda servicing lawn mower dealer, unless you are mechanically proficient and have the proper tools. Refer to the Honda shop manual for service procedures.

BLADE

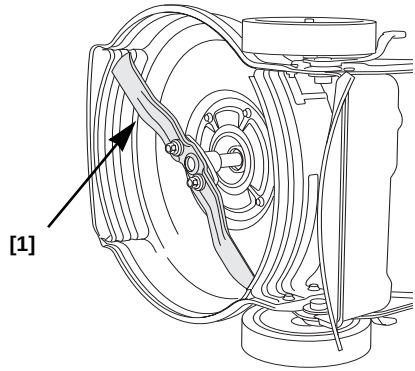

1. Turn the fuel valve to OFF (page 8). Disconnect the spark plug cap from the spark plug (page 35).
2. Tilt the mower to the right, so the carburetor side is up. This will help to prevent fuel leakage and hard starting.
3. Inspect the blade [1] for wear and damage.

⚠ WARNING

A worn, cracked, or damaged blade can break, and pieces of the damaged blade can become dangerous projectiles.

Thrown objects can cause serious injury.

Inspect the blade(s) regularly. Do not operate the mower with a worn or damaged blade.

NORMAL | EXCESSIVELY WORN | BENT | CRACKED

A dull blade can be sharpened, but a blade that is worn out, bent, cracked, or otherwise damaged must be replaced. A worn or damaged blade can break, causing blade pieces to be thrown from the mower.

When a blade needs sharpening or replacement take the lawn mower to an authorized Honda servicing dealer. Or, if you have a torque wrench, you can remove and install the blade(s) yourself (page 30).

Check that the blade bolts are tight (page 30).

Blade Removal and Installation

If you remove the blade(s), use a torque wrench for installation. Wear heavy gloves to protect your hands. To avoid weakening the blade(s), or causing imbalance or poor cutting, the blade(s) should be sharpened by trained staff at an authorized Honda servicing dealer. If replacing the blade, use a genuine Honda replacement blade(s) or equivalent.

Blade Removal

1. Turn the fuel valve to OFF (page 20). Disconnect the spark plug cap (page 35), then tilt the mower to the right side (carburetor side up).
2. Remove the two blade bolts [1] with a 14 mm socket. Use a wooden block to prevent the blade [2] from turning when removing the bolts. Remove the blade from the blade holder.

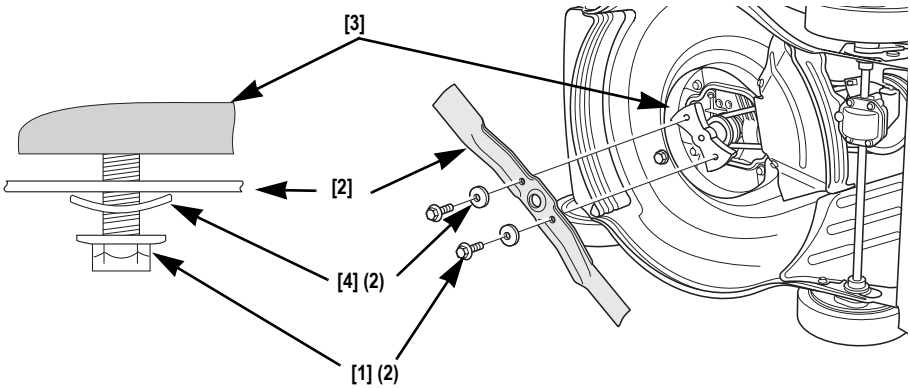

Blade Installation

1. Clean around the blade holder [2]. Install the blade using the bolts and special washers [3] as shown [concave side of the special washers toward the blade].

   The blade bolts and washers are specially designed for the mower. Should you ever have to replace them, use only genuine Honda parts. Otherwise, a blade may become detached from the mower and cause serious injury.

2. Tighten the bolts with a torque wrench. Use a wooden block to stop the blade from turning.

   Blade bolt torque: 36 ~ 43 ft-lb (49 ~ 59 N·m)

If you don't have a torque wrench, have an authorized Honda servicing dealer tighten the blade bolts before you use the mower. If the blade bolts are overtightened, they could break. If the blade bolts are not tightened enough, they could loosen or come out. In either case, it would be possible for the blade to fly off while you are operating the mower.

GRASS BAG CLEANING AND REPLACEMENT

Grass Bag Cleaning

Wash the bag with a garden hose, and allow it to dry completely before use; a wet bag will clog quickly.

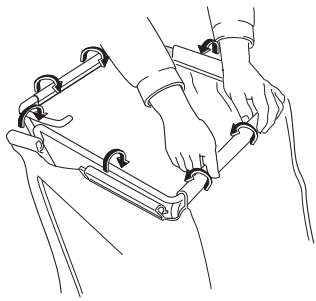

Grass Bag Replacement

Replace a worn or damaged bag with a genuine Honda bag or its equivalent.

Bag Removal
Unclip the plastic edges of the bag from the frame. Remove the bag from the frame.

Bag Installation
Insert the frame into the new bag. Clip the plastic edges to the frame as shown.

ENGINE MAINTENANCE

Engine Oil Level Check

1. Wipe the dipstick clean.
2. Insert and remove the filler cap/ dipstick [1] **without screwing it into the filler neck**. Check the oil level shown on the dipstick.

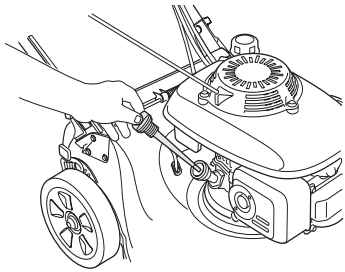

3. If the oil level is low, add oil to bring the level between the upper limit [2] and lower limit [3] marks on the dipstick as shown.**Do not overfill.** If the engine is overfilled, the excess oil may transfer to the air cleaner housing and filter.

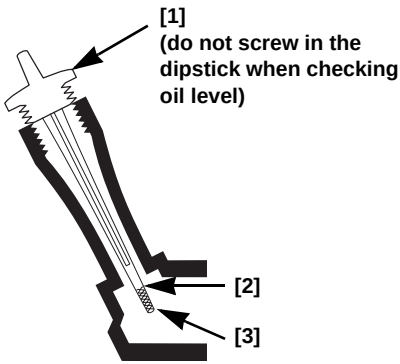

NOTICE

Running the engine with a low oil level can cause engine damage.

4. Screw in the filler cap/dipstick securely.

Engine Oil Recommendations

Oil is a major factor affecting performance and service life. Use 4-stroke automotive detergent oil.

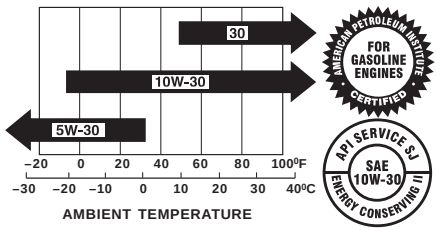

SAE 10W-30 is recommended for general use. Other viscosities shown in the chart may be used when the average temperature in your area is within the recommended range.

The SAE oil viscosity and service classification are in the API label on the oil container. Honda recommends that you use API SERVICE category SH or SJ oil.

Engine Oil Change

Drain the used oil while the engine is warm. Warm oil drains quickly and completely.

1. Turn the fuel valve to OFF to reduce the possibility of fuel leakage (page 20).
2. Lock the front wheels (page 20).
3. Wipe the oil filler area clean, then remove the oil filler cap/dipstick.
4. Place a suitable container next to the mower to catch the used oil, then tilt the mower on its right side.

   The used oil will drain through the filler neck. Allow the oil to drain completely.

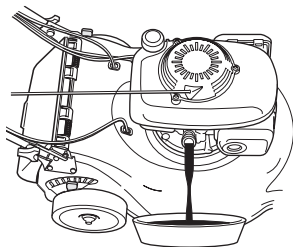

NOTICE

Improper disposal of engine oil can be harmful to the environment. If you change your own oil, please dispose of the used oil properly. Put it in a sealed container, and take it to a recycling center. Do not discard it in a trash bin or dump it on the ground.

5. Fill with the recommended oil. Do not overfill. Allow a couple of minutes for the oil to settle in the engine, then measure the oil level as shown on page 32.

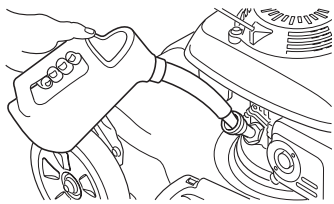

NOTICE

Using nondetergent oil can shorten the engine's service life, and using 2-stroke oil can damage the engine.

Air Cleaner Service

A dirty air filter restricts air flow to the carburetor, reducing engine performance. If you operate the mower in very dusty areas, clean the air filter more often than specified in the MAINTENANCE SCHEDULE.

NOTICE

Operating the engine without an air filter, or with a damaged filter, will allow dirt to enter the engine, causing rapid engine wear. This type of damage is not covered by the Distributor's Limited Warranty*.*

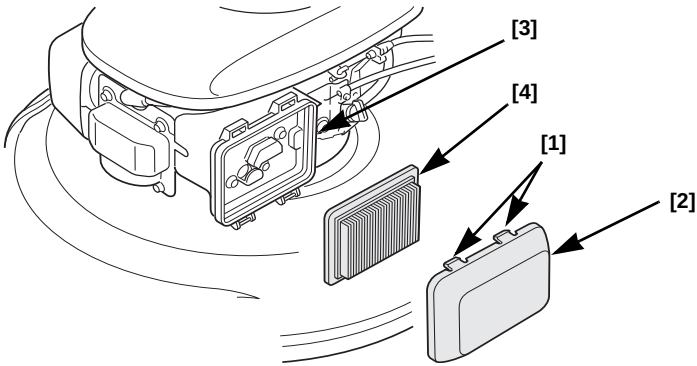

1. Press down on the cover tabs [1], then remove the cover [2] from the housing [3].
2. Remove the filter [4] and inspect it; if damaged, replace the filter.
3. Clean the filter by tapping the filter several times on a hard surface to remove dirt, or blowing compressed air [not exceeding 30 psi (207 kPa)] through the filter from the inside. Never try to brush off dirt; brushing will force dirt into the fibers.
4. Wipe dirt from the inside of the air cleaner housing and cover, using a moist rag. Be careful to prevent dirt from entering the air duct that leads to the carburetor.
5. Reinstall the filter and cover.

Spark Plug Service

Recommended spark plug: BPR5ES (NGK)

For good performance, the spark plug must be properly gapped and free of deposits.

NOTICE

An incorrect spark plug can cause engine damage.

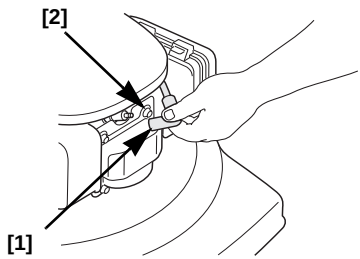

1. Disconnect the spark plug cap [1] and remove dirt from the area.

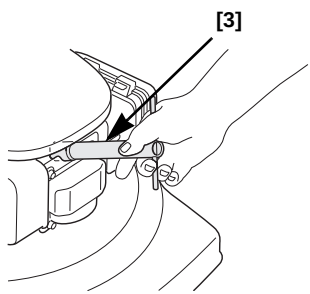

2. Remove the spark plug [2] with a spark plug wrench [3].
3. Inspect the plug; replace it if the electrodes are worn, or if the insulator is cracked or chipped
4. Set the gap to 0.7 ~ 0.8 mm.

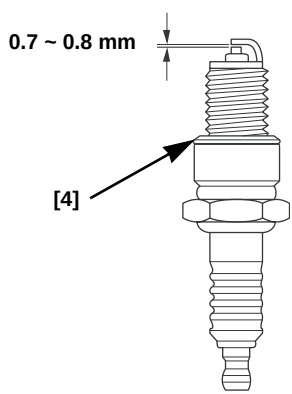

5. Install the spark plug carefully, by hand, to avoid cross-threading.
6. After the plug seats, tighten it as follows to compress the sealing washer [4]:
   Old plug: 1/8 to 1/4 turn
   New plug: 1/2 turn

   NOTICE

   A loose spark plug can overheat and damage the engine. Overtightening the spark plug can damage the threads in the cylinder head.

7. Install the spark plug cap on the spark plug.

Spark Arrester Service

The spark arrester must be serviced every 100 hours to keep it functioning as designed.

1. Allow the engine to cool, then remove the three bolts [1] from the muffler shield [2]. Remove the muffler shield.
2. Remove the two set screws [3] and remove the spark arrester [4].
3. Check for carbon deposits on the spark arrester and the exhaust port. Use a brush to remove any carbon deposits from the screen. Replace the screen if it is torn or damaged.
4. Installation is the reverse of removal. Tighten all hardware securely.

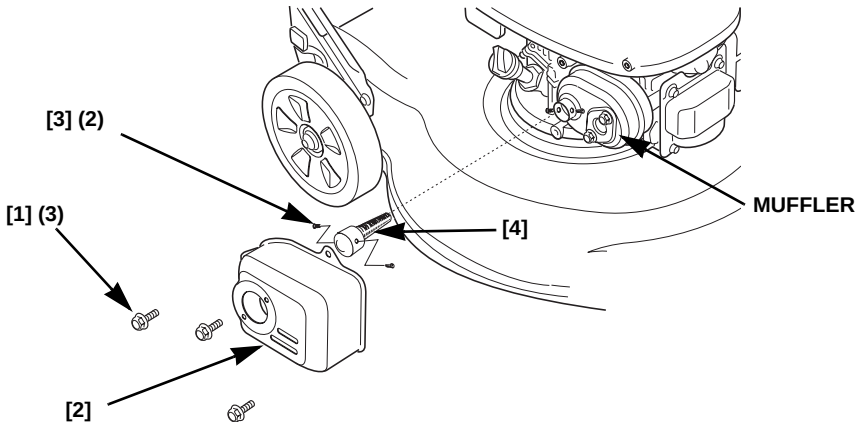

FLYWHEEL BRAKE

Start the engine outdoors and move the throttle to FAST. Release the flywheel brake lever; the engine should stop quickly. If it does not, take your mower to an authorized Honda servicing dealer for repair.

CASTER WHEEL LOCK PINS

Remove the 4 wheel cover screws [1] and the front wheel covers [2]. Move the lock lever between the LOCK [3] and RELEASE [4] positions and make sure the lock pins [5] move freely. The lock pins must completely lock and release the front wheels. Clean all dirt and debris away from the lock pin area. If a lock pin is binding, apply multi-purpose grease to the lock pin.

Reinstall the front wheel covers and tighten the screws securely.

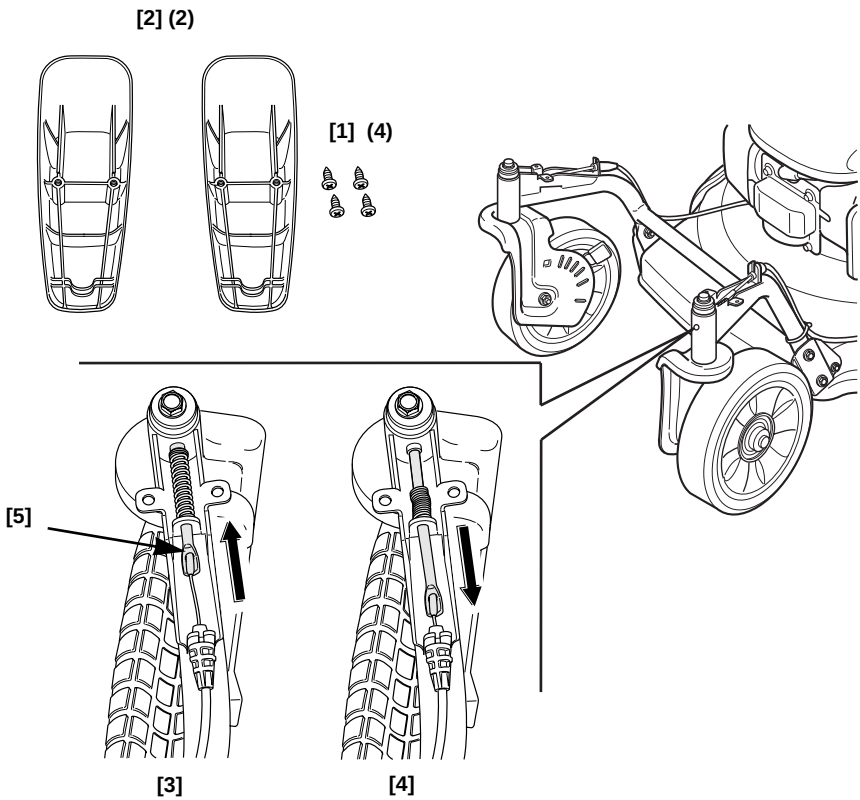

FUEL SYSTEM

Refueling

Fuel tank capacity: 0.91 ℓ

If the fuel level is low, refuel in a well-ventilated area with the engine stopped. If the engine has been running, allow it to cool first.

To refuel, remove the fuel tank cap [1], and fill the tank with gasoline to the bottom of the filler neck [2]. Refuel carefully to avoid spilling fuel. Do not overfill. There should be no fuel in the filler neck. After refueling, tighten the fuel tank cap securely.

⚠ WARNING

Gasoline is highly flammable and explosive. You can be burned or seriously injured when handling fuel.
- Stop the engine and keep heat, sparks, and flame away.
- Handle fuel only outdoors.
- Wipe up spills immediately.

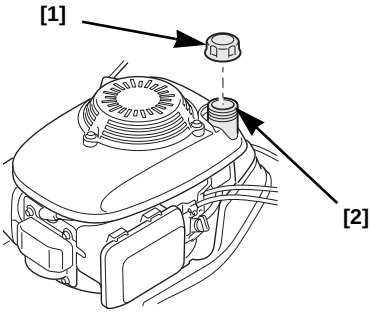

Never refuel the engine inside a building where gasoline fumes may reach flames or sparks. Keep gasoline away from appliance pilot lights, barbecues, electric appliances, power tools, etc.

Spilled fuel is not only a fire hazard, it causes environmental damage. Wipe up spills immediately.

Move at least 10 feet (3 meters) away from the fueling source and site before starting the engine.

NOTICE

Fuel can damage paint and plastic. Be careful not to spill fuel when filling your fuel tank. Damage caused by spilled fuel is not covered by the Distributor's Limited Warranty.

Fuel Recommendations

Use unleaded gasoline with a pump octane rating of 86 or higher.

These engines are certified to operate on unleaded gasoline. Unleaded gasoline produces fewer engine and spark plug deposits and extends exhaust system life.

Never use stale or contaminated gasoline or an oil/gasoline mixture. Avoid getting dirt or water in the fuel tank.

Occasionally you may hear light “spark knock” or “pinging” (metallic rapping noise) while operating under heavy loads. This is no cause for concern.

If spark knock or pinging occurs at a steady engine speed, under normal load, change brands of gasoline. If spark knock or pinging persists, see an authorized Honda servicing dealer.

NOTICE

Running the engine with persistent spark knock or pinging can cause engine damage.

This is considered misuse, and the *Distributor’s Limited Warranty* does not cover parts damaged by misuse.

For oxygenated fuel information refer to page 50.

STORAGE

STORAGE PREPARATION

Proper storage preparation is essential for keeping your lawn mower trouble-free and looking good. The following steps will help to keep rust and corrosion from impairing your lawn mower's function and appearance, and will make the engine easier to start when you use the lawn mower again.

Cleaning

1. Wash the lawn mower, including the underside of the mower deck.

   Engine

   Wash the engine by hand, and be careful to prevent water from entering the air cleaner.

   NOTICE

   - *Using a garden hose or pressure washing equipment can force water into the air cleaner. Water in the air cleaner will soak the filter and can enter the carburetor or engine, causing damage.*
   - *Water on a hot engine can cause damage. If the engine has been running, allow it to cool for at least 1/2 hour before washing.*

   Mower Deck

   If using a garden hose or pressure washing equipment to clean the mower deck, be careful to avoid getting water into controls and cables, or anywhere near the engine air cleaner or muffler opening.

   Before washing the underside of the mower deck, be sure the fuel valve is in the OFF position. Disconnect the spark plug cap. Rest the mower on its right side, so the carburetor side is up. This will help to prevent fuel leakage and hard starting due to carburetor flooding. Wear heavy gloves to protect your hands from the blade.
2. After washing the lawn mower, wipe dry all accessible surfaces.
3. With the mower in an upright position, start the engine outdoors, and let it run until it reaches normal operating temperature to evaporate any water remaining on the engine.
4. Stop the engine and allow it to cool.
5. After the lawn mower is clean and dry, touch up any damaged paint, and coat other areas that may rust with a light film of oil. Lubricate the control cable cores with a silicone spray lubricant.

Fuel

Gasoline will oxidize and deteriorate in storage. Old gasoline will cause hard starting, and it leaves gum deposits that clog the fuel system. If the gasoline in your mower deteriorates during storage, you may need to have the carburetor and other fuel system components, serviced or replaced.

The length of time that gasoline can be left in your fuel tank and carburetor without causing functional problems will vary with such factors as gasoline blend, your storage temperatures, and whether the fuel tank is partially or completely filled. The air in a partially filled fuel tank promotes fuel deterioration. Very warm storage temperatures accelerate fuel deterioration. Fuel deterioration problems may occur within a few months, or even less if the gasoline was not fresh when you filled the fuel tank.

The *Distributor's Limited Warranty* does not cover fuel system damage or engine performance problems resulting from neglectful storage preparation.

You can extend fuel storage life by adding a fuel stabilizer that is formulated for that purpose, or you can avoid fuel deterioration problems by draining the fuel tank and carburetor.

Adding fuel stabilizer to extend fuel storage life

When adding a fuel stabilizer, fill the fuel tank with fresh gasoline. If only partially filled, air in the tank will promote fuel deterioration during storage. If you keep a container of gasoline for refueling, be sure that it contains only fresh gasoline.

1. Add fuel stabilizer following the manufacturer's instructions.
2. After adding a fuel stabilizer, run the engine outdoors for 10 minutes to be sure that treated gasoline has replaced the untreated gasoline in the carburetor.
3. Stop the engine, and turn the fuel valve to the OFF position. This turns off the fuel flow between the fuel tank and the carburetor.

Draining the Fuel Tank and Carburetor

1. Remove the carburetor drain bolt [1] with a 10 mm wrench, and drain the carburetor bowl fuel into an approved container.

⚠ WARNING

Gasoline is highly flammable and explosive.

You can be burned or seriously injured when handling fuel.

- Stop the engine and keep heat, sparks, and flame away.
- Handle fuel only outdoors.
- Wipe up spills immediately.

2. Turn the fuel valve ON (page 8). This will allow fuel in the fuel tank to drain through the carburetor bowl. After the fuel is completely drained, reinstall the drain bolt.

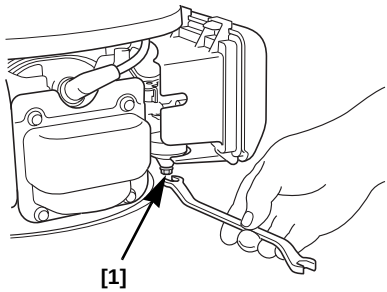

Engine Oil

Change the engine oil (page 33).

Engine Cylinder

Remove the spark plug (page 35). Pour a tablespoon (5 ~ 10 cc) of clean engine oil into the cylinder. Pull the starter rope several times to distribute the oil in the cylinder. Reinstall the spark plug. Pull the starter rope slowly until resistance is felt then return the starter grip gently. This closes the valves so moisture cannot enter.

Handlebar Folding

Remove the grass bag (if installed). Loosen the handlebar locking knobs [2]. Press each side of the lower handlebar outward to release the locating pins, then swing the handlebar forward. Don’t allow the cables to be bent or pinched.

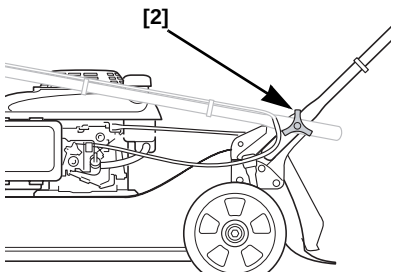

STORAGE PRECAUTIONS

If your mower will be stored with gasoline in the fuel tank and carburetor, it is important to reduce the hazard of gasoline vapor ignition. Select a well-ventilated storage area away from any appliance that operates with a flame, such as a furnace, water heater, or clothes dryer. Also avoid any area with a spark-producing electric motor, or where power tools are operated.

If possible, avoid storage areas with high humidity, because that promotes rust and corrosion.

Unless all fuel has been drained from the fuel tank, turn the fuel valve to OFF to reduce the possibility of fuel leakage.

Place the mower with its wheels on a level surface. Tilting can cause fuel or oil leakage.

The handlebar can be folded for compact storage (page 42).

With the engine and exhaust system cool, cover the mower to keep out dust. A hot engine and exhaust system can ignite or melt some materials. Do not use sheet plastic as a dust cover. A nonporous cover will trap moisture around the mower, promoting rust and corrosion.

REMOVAL FROM STORAGE

Check your mower as described in the *BEFORE OPERATION* chapter (page 11).

If the fuel was drained during storage preparation, fill the tank with fresh gasoline. If you keep a container of gasoline for refueling, be sure that it contains only fresh gasoline. Gasoline oxidizes and deteriorates over time, causing hard starting.

If the cylinder was coated with oil during storage preparation, the engine will smoke briefly at startup. This is normal.

TRANSPORTING

BEFORE LOADING

If the engine has been running, allow it to cool for at least 15 minutes before loading the mower on the transport vehicle. A hot engine and exhaust system can burn you and can ignite some materials.

Turn the fuel valve [1] to OFF [2] (page 20). This will prevent carburetor flooding and reduce the possibility of fuel leakage.

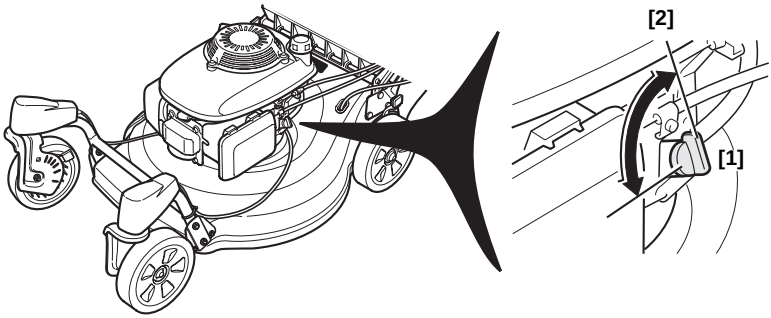

If equipped, remove the grass bag.

LOADING AND UNLOADING

If a suitable loading ramp is not available, two people should lift the mower on and off the transport vehicle while holding the mower level.

Position the mower so all four wheels are on the bed of the transport vehicle. Tie the mower down with rope or straps, and block the wheels. Keep the tie-down rope or straps away from the controls, adjustment levers, cables, and the carburetor.

The handlebar can be folded so the mower will take up less space (see page 42).

Put the front wheels in the LOCK position to decrease mower movement while in transit (page 9).

TAKING CARE OF UNEXPECTED PROBLEMS

ENGINE PROBLEMS

Engine Will Not Start	Possible Cause	Correction
Check control positions.	Fuel valve OFF.	Turn fuel valve ON (p. 8).
	Throttle lever in wrong position.	Move throttle lever to CHOKE position, unless the engine is warm (p. 15).
Check fuel.	Out of fuel.	Refuel (p. 38).
	Bad fuel; mower stored without treating or draining gasoline, or refueled with bad gasoline.	Drain fuel tank and carburetor (p. 42). Refuel with fresh gasoline (p. 38).
Remove and inspect spark plug.	Spark plug faulty, fouled, or improperly gapped.	Check gap, or replace spark plug (p. 35).
	Spark plug wet with fuel (flooded engine).	Dry and reinstall spark plug. Start engine with throttle lever in FAST position.
Take mower to an authorized Honda servicing dealer, or refer to shop manual.	Fuel filter clogged, carburetor malfunction, ignition malfunction, valves stuck, etc.	Replace or repair faulty components as necessary.

Loss of Power	Possible Cause	Correction
Check throttle position.	Throttle not set to FAST.	Move throttle to FAST (p.17).
Check grass height.	Grass too tall to cut.	Raise cutting height (p. 10), cut narrower swath (p.23), or cut more frequently.
Check under mower deck.	Mower deck clogged.	Clean out mower deck.
Check air filter.	Air filter clogged.	Clean or replace air filter (p.34).
Check fuel.	Bad fuel; mower stored without treating or draining gasoline, or refueled with bad gasoline.	Drain fuel tank and carburetor (p.42). Refuel with fresh gasoline (p.38).
Take mower to an authorized Honda servicing dealer, or refer to shop manual.	Fuel filter clogged, carburetor malfunction, ignition malfunction, valves stuck, etc.	Replace or repair faulty components as necessary.

TAKING CARE OF UNEXPECTED PROBLEMS

VIBRATION PROBLEMS

Excessive Vibration	Possible Cause	Correction
Check mower deck and blade.	Grass and debris lodged under mower deck.	Clean out mower deck (p. 24).
Take mower to an authorized Honda servicing dealer for repair.	Mechanical damage, such as a bent crankshaft.	Replace or repair faulty components as necessary.

MOWING AND BAGGING PROBLEMS

Poor Cut Quality or Poor Mowing/Bagging Performance	Possible Cause	Correction
Check that the throttle lever is in the FAST position.	Engine speed is too slow to cut well.	Move throttle lever to the FAST position (p.17).
Reduce forward speed.	Mower is moving too fast for lawn conditions.	Release the drive clutch lever and push slowly. Shift to a lower gear.
Check cutting height adjustment levers.	Adjustment levers set at different positions.	Set all levers at the same cutting height position (p.10).
Check grass bag (if equipped).	Grass bag overfilled or clogged.	Empty the grass bag. Wash the grass bag if clogged with dirt (p.31).
Check mower deck and blade.	Mower deck clogged.	Clear out the mower deck (p.24).
	Blade dull, worn, or damaged.	Sharpen or replace blade if necessary (p.30).

SET-UP

Unpacking

Remove all the cardboard from the mower, including the piece around the handlebar.

Handlebar Setup

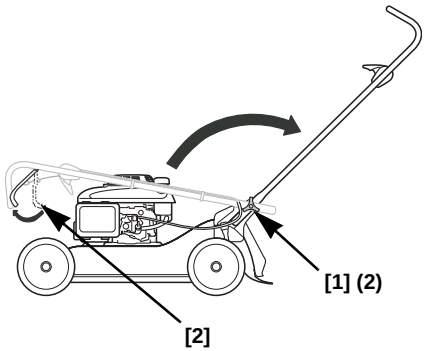

Loosen the two locking knobs [1] on the lower handlebar enough to raise the handlebar into the mowing position. Hold the flywheel brake lever [2] against the handlebar, and unfold the handlebar into the mowing position. Remove the piece of paper between the handlebar and the frame. Once the handlebar is in place, tighten the knobs securely.

Grass Bag Assembly

Slide the grass bag frame [1] into the grass bag [2] and attach the clips [3] as shown.

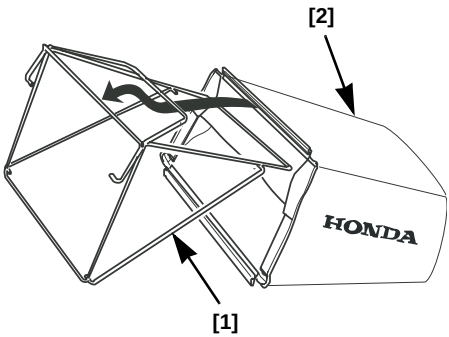

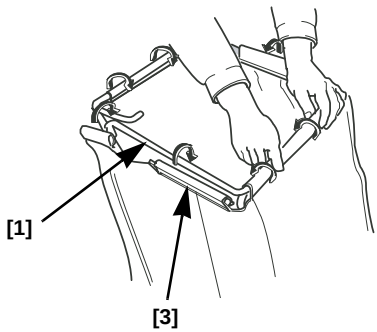

Lift the rear discharge guard [4], and install the grass bag.

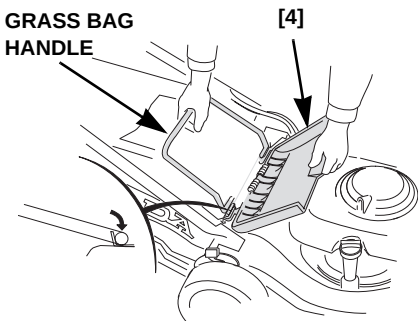

Engine Oil

The lawn mower is shipped **WITHOUT OIL** in the engine.

Add enough SAE 10W-30 API service category SH or SJ oil to bring the oil level between the upper limit [2] and lower limit [3] marks on the filler cap/dipstick [1] as shown.

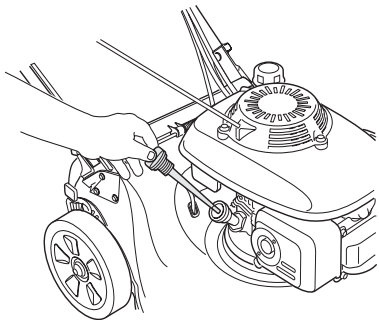

Do not overfill engine oil. If the engine is overfilled, the excess oil may get transferred to the air cleaner housing and air filter.

For additional engine oil information, see page 32.

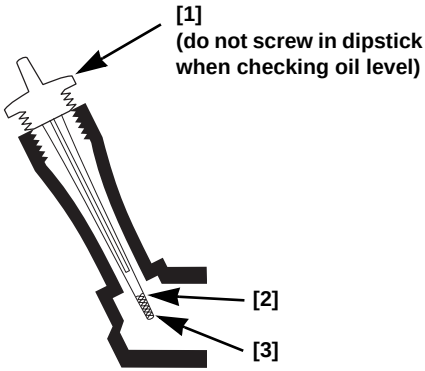

Fuel

Refer to page 38.

BEFORE OPERATION

Before using the lawn mower, all mower operator’s must read the following chapters and sections:

- **LAWN MOWER SAFETY** (page 6)
- **CONTROLS & FEATURES** (page 7)
- **BEFORE OPERATION** (page 11)
- **OPERATION** (page 15)
- **MAINTENCE SCHEDULE** (page 28)

TECHNICAL & CONSUMER INFORMATION

TECHNICAL INFORMATION

Carburetor Modification for High Altitude Operation

At high altitude, the standard carburetor air-fuel mixture will be too rich. Performance will decrease, and fuel consumption will increase. A very rich mixture will also foul the spark plug and cause hard starting. Operation at an altitude that differs from that at which this engine was certified, for extended periods of time, may increase emissions.

High altitude performance can be improved by specific modifications to the carburetor. If you always operate your mower at altitudes above 5,000 feet (1,500 meters), have your servicing dealer perform this carburetor modification. This engine, when operated at high altitude with the carburetor modifications for high altitude use, will meet each emission standard throughout its useful life.

Even with carburetor modification, engine horsepower will decrease about 3.5% for each 1,000-foot (300-meter) increase in altitude. The effect of altitude on horsepower will be greater than this if no carburetor modification is made.

NOTICE

When the carburetor has been modified for high altitude operation, the air-fuel mixture will be too lean for low altitude use. Operation at altitudes below 5,000 feet (1,500 meters) with a modified carburetor may cause the engine to overheat and result in serious engine damage. For use at low altitudes, have your servicing dealer return the carburetor to original factory specifications.

Oxygenated Fuels

Some conventional gasolines are being blended with alcohol or an ether compound. These gasolines are collectively referred to as oxygenated fuels. To meet clean air standards, some areas use oxygenated fuels to help reduce emissions. If you use an oxygenated fuel, be sure it is unleaded and meets the minimum octane rating requirement. Before using an oxygenated fuel, try to confirm the fuel's contents. Some states/provinces require this information to be posted on the pump.

The following are approved percentages of oxygenates:

ETHANOL —— (ethyl or grain alcohol) 10% by volume

You may use gasoline containing up to 10% ethanol by volume. Gasoline containing ethanol may be marketed under the name “Gasohol”.

MTBE ———— (Methyl Tertiary Butyl Ether) 15% by volume

You may use gasoline containing up to 15% MTBE by volume.

METHANOL —- (methyl or wood alcohol) 5% by volume

You may use gasoline containing up to 5% methanol by volume, as long as it also contains cosolvents and corrosion inhibitors to protect the fuel system.

Gasoline containing more than 5% methanol by volume may cause starting and/or performance problems. It may also damage metal, rubber, and plastic parts of your fuel system.

If you notice any undesirable operating symptoms, try another service station, or switch to another brand of gasoline. Fuel system damage or performance problems resulting from the use of an oxygenated fuel containing more than the percentages of oxygenates mentioned above are not covered under the *Distributor’s Limited Warranty*.

Emission Control System

Source of Emissions

The combustion process produces carbon monoxide, oxides of nitrogen, and hydrocarbons. Control of hydrocarbons and oxides of nitrogen is very important because, under certain conditions, they react to form photochemical smog when subjected to sunlight. Carbon monoxide does not react in the same way, but it is toxic.

Honda uses lean carburetor settings and other systems to reduce the emissions of carbon monoxide, oxides of nitrogen, and hydrocarbons.

Problems That May Affect Emissions

If you are aware of any of the following symptoms, have your engine inspected and repaired by your authorized Honda servicing dealer.

- Hard starting or stalling after starting
- Rough idle
- Misfiring or backfiring under load
- Afterburning (backfiring)
- Black exhaust smoke or high fuel consumption

Replacement Parts

We recommend the use of genuine Honda parts whenever you have maintenance done. These original-design replacement parts are manufactured to the same standards as the original parts, so you can be confident of their performance. The use of replacement parts that are not of the original design and quality may impair the effectiveness of your emission control system.

Maintenance

Follow the maintenance schedule on page 28. Remember that this schedule is based on the assumption that your machine will be used for its designed purpose. Sustained high-load operation will require more frequent service.

SPECIFICATIONS

MOWER MODEL

HRZ536CTDE	Honda rotary mower, grass bag, 530 mm mower deck, 3-speed transmission, flywheel brake, European market

DIMENSIONS, WEIGHTS, AND CAPACITIES

Length	1785 mm
Width	585 mm
Overall height	970 mm
Dry weight	41.9 kg
Cutting width	530 mm
Cutting heights	19 ~ 80 mm
Fuel tank capacity	0.91ℓ
Engine oil capacity	0.55ℓ

ENGINE DESIGN AND PERFORMANCE

Model	GCV160
Engine type	4-stroke, overhead-cam, single-cylinder, air-cooled
Displacement	160 cc
Bore and stroke	64 x 50 mm
Compression ratio	8.5:1
Ignition system	Transistorized magneto

TRANSMISSION DESIGN AND PERFORMANCE

Transmission type	3-speed
Ground speeds	1st: 0.7 m/s 2nd: 1.1 m/s 3rd: 1.3 m/s

MAINTENANCE

Fuel	Unleaded gasoline with a pump octane rating of 86 or higher	See page 39.
Engine oil	SAE 10W-30	See page 32.
Spark plug type (Resistor plugs reduce interference with radio and television reception.)	NGK - BPR5ES	See page 35.
Maximum governed speed	2,850 $^{+0}_{-100}$ rpm	See shop manual.
Throttle cable	Adjust for proper choke operation and maximum governed speed.	See shop manual.
Blade bolt torque	5.0 ~ 6.0 kg-m, 49 ~ 59 N•m	See page 30.

TUNEUP

Spark plug gap	0.7 ~ 0.8 mm	See page 35.
Idle speed	1,700 ± 150 rpm	See shop manual.
Valve clearance (cold)	Intake: 0.15 ± 0.02 mm Exhaust: 0.20 ± 0.02 mm	See shop manual.
Other specifications	No other adjustments needed.	
Sound power level (according to Directive 2000/14/EC)	98 dB	
Vibration test (according to project EN1033/1993, ENV25349/1993, ENV28041/1993, ISO 5347/1987, and ISO 5348/1987	4.5 m/s^2	

CONSUMER INFORMATION

Honda Publications

These publications will give you additional information for maintaining and repairing your lawn mower. You may order them from your servicing Honda lawn mower dealer.

Shop Manual
This manual covers complete maintenance and overhaul procedures. It is intended to be used by a skilled technician.

Parts Catalog
This manual provides complete, illustrated parts lists.

HONDA

The Power of Dreams

C1

POM53754-B

39VG4020
00X39-VG4-0200

Printed on
Recycled Paper

IPC XXXX.2007.09
PRINTED IN U.S.A.